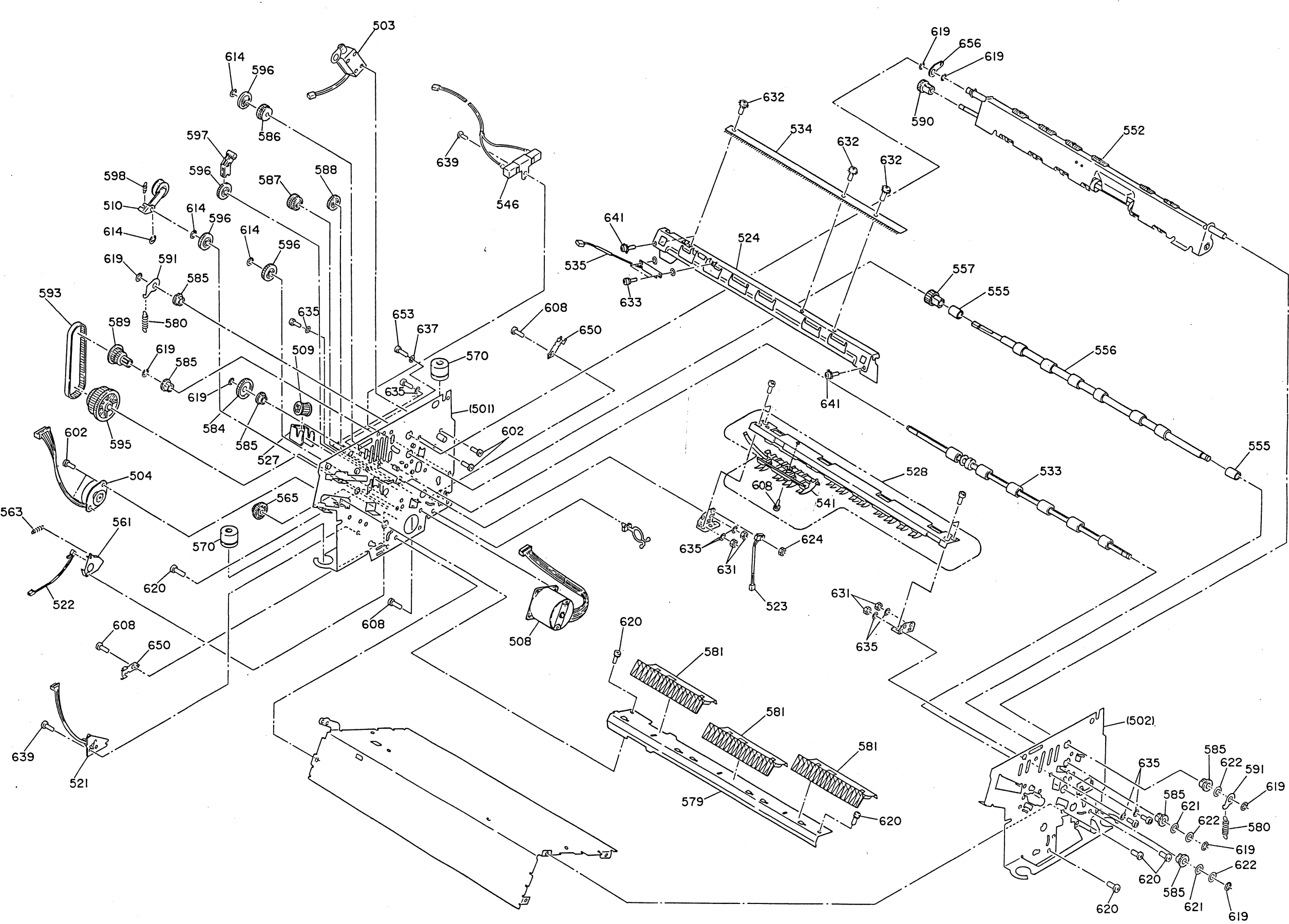


EXPLODED DIAGRAM FOR DEX-5000+(3) C117-ALL-032 1507