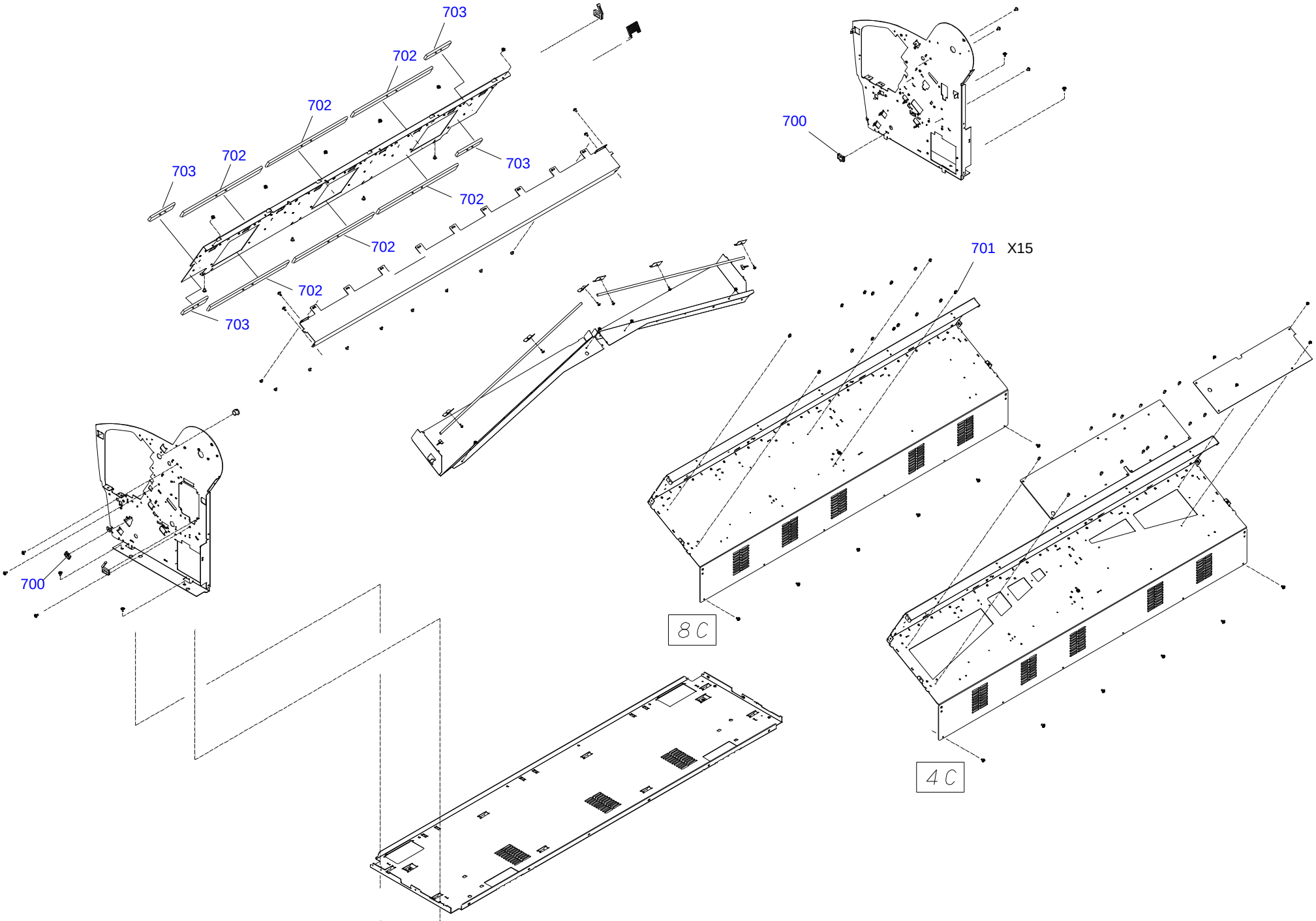

PX-9500,9500S / EPSON STYLUS PRO 9400,9800 No.10 Rev.02 C595-MECH-052