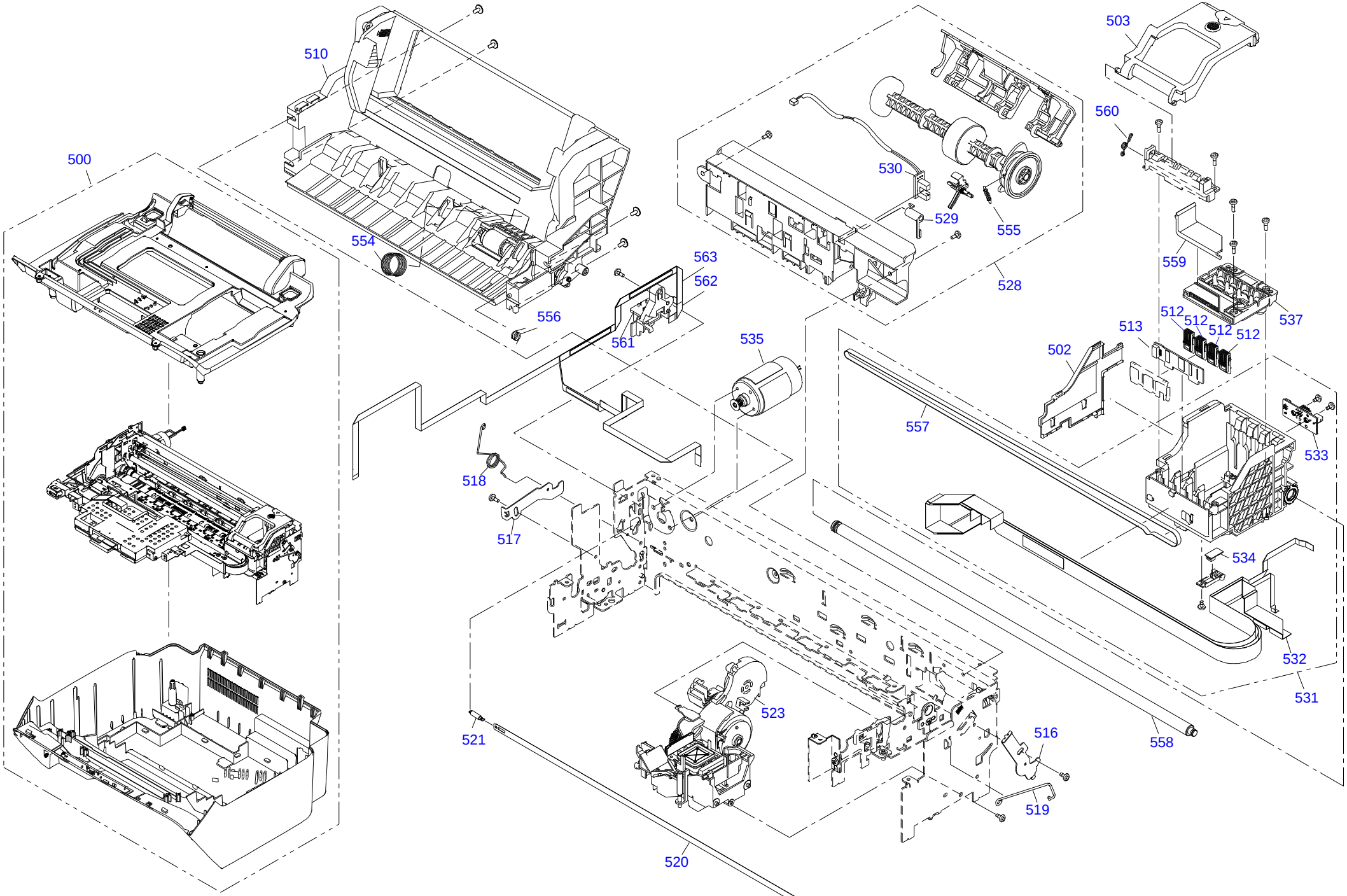

PM-A750, EPSON Stylus Photo RX520/530

REV.02 C613-MECH-0022